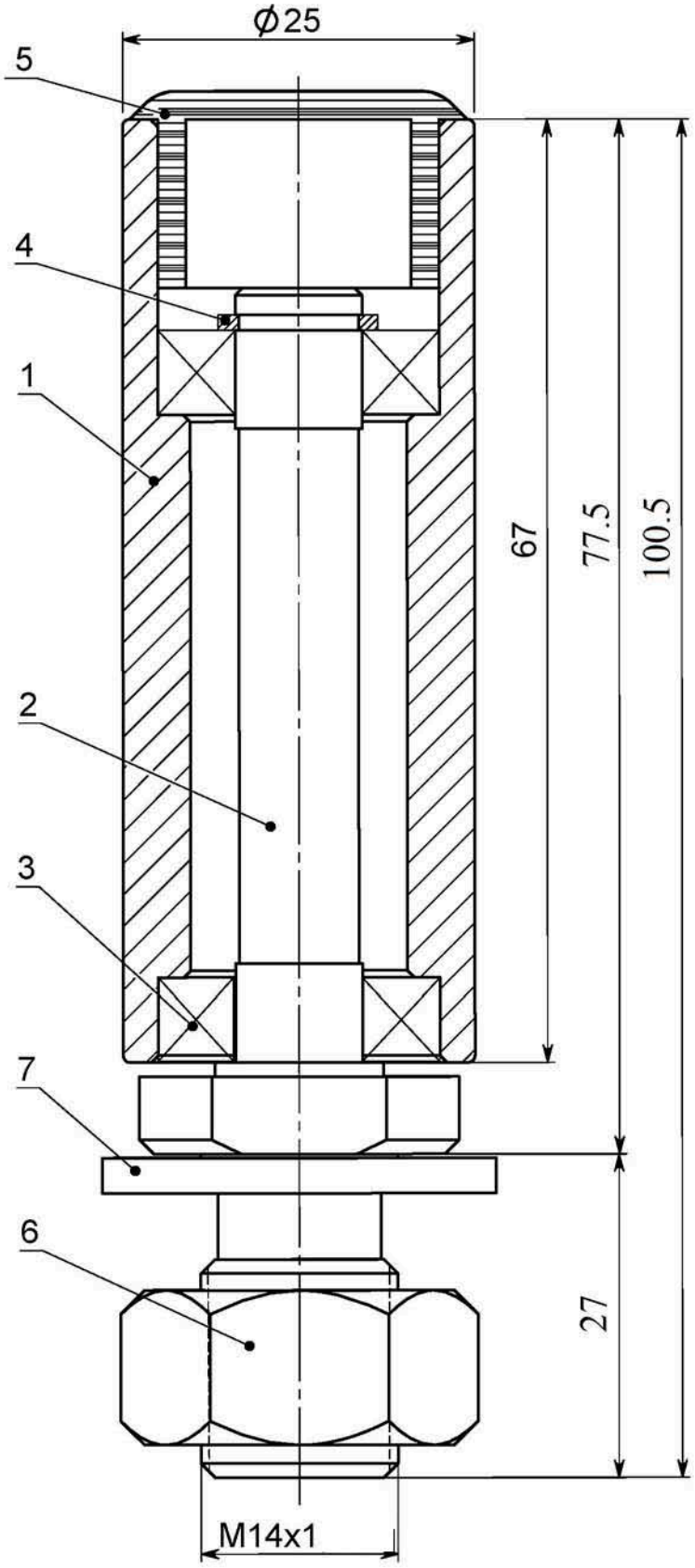

UNLESS OTHERWISE SPECIFIED: DIMENSIONS ARE IN MILLIMETERS SURFACE FINISH: TOLERANCES: LINEAR: ANGULAR:	FINISH: HRC:			DEBUR AND BREAK SHARP EDGES	DO NOT SCALE DRAWING	REVISION
					Subec AB	
	NAME	SIGNATURE	DATE		TITLE:	
DRAWN					Roller, vert, D25 L67	
CHK'D						
APPV'D						
MFG						
Q.A				Article Nr. **5127**	DWG NO. 3-400231-00	A4
				WEIGHT: 213.81g	SCALE:1:1	SHEET 1 OF 1